LIFE UN-INTERRUPTED

Presenting Citric, Premium Noise-free Switches By Honeywell.

CITRIC - THE SHHH... SWITCH.

Honeywell

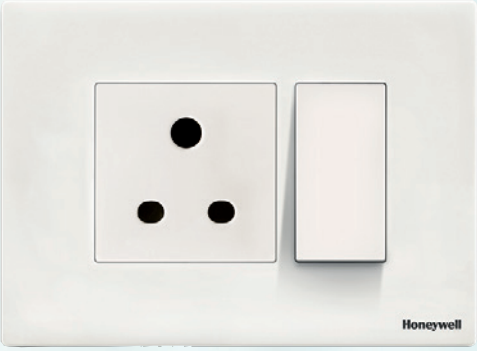

There are little things in our everyday life which we like to enjoy without any interruption. Small joys like watching your child sleep peacefully, enjoying your favourite movie without any breaks, getting appreciated for successful presentation. At Honeywell, we deep dive into human behaviour and lifestyle in order to improve user experience and we take pride in designing and developing products which are intuitive. In this quest, we now present Citric, Noise free switches.

So life goes on un-interrupted.

SOFT OPERATING FORCE

The operation of Citric switches is very soft. It allows the person to use very low force while operating which makes it the Soft switch

MODULE ROTATION

Rotation of Module allows to install the accessories into plates, in any position. This is helpful for locations where there is a space constraint and provide flexibility to user and help reduce the stress level on wires.

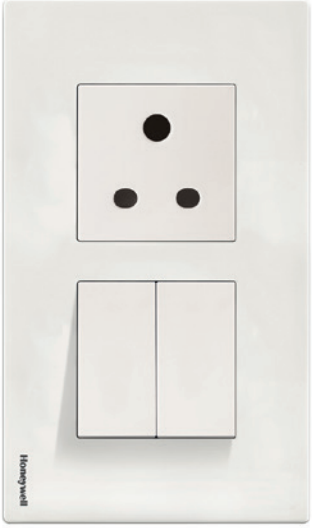

FRONT LOADING AND REMOVAL

Front Loading and removal of accessories makes Installation and maintenance work easy, you don't need to unscrew the grid plate for removal of accessories, just remove accessory carry the work and fix it again into grid plate

DOUBLE ROCKER DESIGN

During normal operation of electric switch, arc is generated at contact. This Arc is usually visible to eyes during low light and can also cause accidental fire. Double Rocker design helps to shield this Arc effectively.

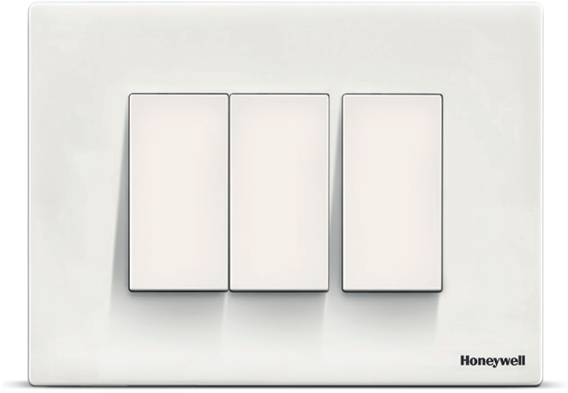

HONEYCOMB DESIGNED GRID PLATES

Honeycomb design of grid plates makes them sturdy and robust. This ensures that there is no warpage and cracks while installation on metal boxes.

MEETING UN-INTERRUPTED

CITRIC RANGE

6A / 16A
One Way Switch

6A / 16A
Two Way Switch

6A / 16A
One Way Switch with Indicator

20A & 32A
DP Switch with Indicator

6A Bell Push Switch with
and without Indicator

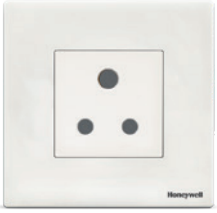

6A Round Pin Socket
(ISI Marked)

6A / 16A
Socket

120W Fan Speed
Controller

400W
Dimmer

25A SP
Mini Trip MCB

25A
Motor Starter

TV
Cable Outlet

RJ11 2 Line with Shutter

Red
Neon Indicator

USB
Charger, 1M

Shaver
Socket

DND, MMR, MML
Internal Unit

DND, MMR, MML
External Unit, with Bell Push

Energy Key Tag
with Time Delay

LED Foot
Light, 2M

Silver

Citric Range is available with Anti-Bacterial feature in White Color.

CITRIC
WIRING DEVICES

FINISH : WHITE

SWITCHES - WHITE

CW501SWHI

CW412SWHI

CW505WHI

ItemCode	Description	Module	Carton Qty.*
CW501SWHI	6AX One Way Switch	1M	**20** / 360
CW502SWHI	6AX Two Way Switch	1M	**20** / 360
CW503SWHI	6AX One Way with Indicator	1M	**20** / 360
CW411SWHI	16AX One Way Switch	1M	**20** / 360
CW412SWHI	16AX Two Way Switch	1M	**20** / 360
CW413SWHI	16AX One Way with Indicator	1M	**20** / 360
CW220WHI	20A DP Switch with Indicator	2M	**12** / 216
CW224WHI	32A DP Switch with Indicator	2M	**12** / 216
CW505WHI	6A Bell Push Switch	1M	**20** / 360
CW504WHI	6A Bell Push Switch	2M	**12** / 216
CW505NWHI	6A Bell Push Switch With Indicator	1M	**20** / 360

SOCKETS - WHITE

CW424WHI

ItemCode	Description	Module	Carton Qty.*
CW421WHI	6A Round Pin Socket (ISI Marked)	2M	**12** / 216
CW424WHI	6/16A Socket (ISI Marked)	2M	**12** / 216

FAN REGULATOR & DIMMER - WHITE

CW472WHI

ItemCode	Description	Module	Carton Qty.*
CW471WHI	100W Fan Step Controller	1M	**15** / 270
CW472WHI	120W Fan Step Controller	2M	**12** / 216
CW480WHI	400W Dimmer	2M	**1** / 60

MINI TRIP MCB & MOTOR STARTER - WHITE

CW217WHI

ItemCode	Description	Module	Carton Qty.*
CW227WHI	25A SP Mini Trip MCB	1M	**10** / 130
CW217WHI	25A Motor Starter	2M	**1** / 20

COMMUNICATION ACCESSORIES - WHITE

CW493WHI

ItemCode	Description	Module	Carton Qty.*
CW493WHI	RJ45 CAT 6A	1M	**20** / 360
CW490WHI	RJ11 1 Line with Shutter	1M	**20** / 360
CW492WHI	RJ11 2 Line with Shutter	1M	**20** / 360

SUPPORT ACCESSORIES - WHITE

CW451WHI

CW595WHI

ItemCode	Description	Module	Carton Qty.*
CW441WHI	Blank Plate	1M	**20** / 360
CW451WHI	TV Coaxial Socket	1M	**20** / 160
CW462WHI	TV Cable Outlet	1M	**20**/160
CW595WHI	Red Neon Indicator	1M	**20**/160
CW586WHI	2.1A 1 Port USB Charger	1M	**15** / 270
CW587WHI	2.4A 2 Port USB Charger	2M	**10** / 180

CITRIC
WIRING DEVICES

HOSPITALITY ACCESSORIES - WHITE

CW901WHI

ItemCode	Description	Module	Carton Qty.*
CW901WHI	DND Indicator	1M	**20** / 360
CW414WHI	Two Way Switch with DND Mark	1M	**20** / 360
CW902WHI	MMR Indicator	1M	**20** / 360
CW415WHI	One Way Switch with MMR Mark	1M	**20** / 360
CW529WHI	Shaver Socket	3M	**1** / 6
CW527WHI	Energy Key Tag with Time Delay	2M	**4** / 60
CW530WHI	LED Foot Lamp	2M	**1** / 60

FRONT PLATES - WHITE

CW102WHI

CW103WHI

ItemCode	Description	Module	Carton Qty.*
CW101WHI	1 Module Front Plate	1M	**10** / 180
CW102WHI	2 Module Front Plate	2M	**10** / 180
CW103WHI	3 Module Front Plate	3M	**8** / 144
CW104WHI	4 Module Front Plate	4M	**8** / 144
CW106WHI	6 Module Front Plate	6M	**8** / 80
CW108HWHI	8 Module Horizontal Front Plate	8M (H)	**4** / 72
CW108VWHI	8 Module Square Front Plate	8M (S)	**4** / 64
CW109WHI	9 Module Horizontal Front Plate	9M	**8** / 72
CW112WHI	12 Module Front Plate	12M	**4** / 40
CW118WHI	18 Module Front Plate	18M	**3** / 21

FINISH : MAGNESIUM GREY

SWITCHES - MAGNESIUM GREY

CW501GRY

CW504GRY

ItemCode	Description	Module	Carton Qty.*
CW501GRY	6AX One Way Switch	1M	**20** / 360
CW502GRY	6AX Two Way Switch	1M	**20** / 360
CW503GRY	6AX One Way with Indicator	1M	**20** / 360
CW411GRY	16AX One Way Switch	1M	**20** / 360
CW412GRY	16AX Two Way Switch	1M	**20** / 360
CW413GRY	16AX One Way with Indicator	1M	**20** / 360
CW220GRY	20A DP Switch with Indicator	2M	**12** / 216
CW224GRY	32A DP Switch with Indicator	2M	**12** / 216
CW505GRY	6A Bell Push Switch	1M	**20** / 360
CW504GRY	6A Bell Push Switch	2M	**12** / 216
CW506GRY	6A Bell Push Switch With LED	1M	**20** / 360

SOCKETS - MAGNESIUM GREY

CW421GRY

ItemCode	Description	Module	Carton Qty.*
CW421GRY	6A Round Pin Socket (ISI Marked)	2M	**12** / 216
CW424GRY	6/16A Socket (ISI Marked)	2M	**12** / 216

FAN REGULATOR - MAGNESIUM GREY

CW472GRY

ItemCode	Description	Module	Carton Qty.*
CW471GRY	100W Fan Step Controller	1M	**15** / 270
CW472GRY	120W Fan Step Controller	2M	**12** / 216

MINI TRIP MCB & MOTOR STARTER - MAGNESIUM GREY

ItemCode	Description	Module	Carton Qty.*
CW227GRY	25A SP Mini Trip MCB	1M	**10** / 130
CW217GRY	25A Motor Starter	2M	**1** / 20

CITRIC
WIRING DEVICES

COMMUNICATION ACCESSORIES - MAGNESIUM GREY

CW493GRY

ItemCode	Description	Module	Carton Qty.*
CW493GRY	RJ45 CAT 6A	1M	**20** / 360
CW490GRY	RJ11 1 Line with Shutter	1M	**20** / 360
CW492GRY	RJ11 2 Line with Shutter	1M	**20** / 360

SUPPORT ACCESSORIES - MAGNESIUM GREY

ItemCode	Description	Module	Carton Qty.*
CW441GRY	Blank Plate	1M	**20** / 360
CW451GRY	TV Coaxial Socket	1M	**10** / 60
CW586GRY	2.1A 1 Port USB Charger	1M	**15** / 270
CW587GRY	2.4A 2 Port USB Charger	2M	**10** / 180

HOSPITALITY ACCESSORIES - MAGNESIUM GREY

ItemCode	Description	Module	Carton Qty.*
CW901GRY	DND Indicator	1M	**20** / 360
CW414GRY	Two Way Switch with DND Mark	1M	**20** / 360
CW902GRY	MMR Indicator	1M	**20** / 360
CW415GRY	One Way Switch with MMR Mark	1M	**20** / 360
CW529GRY	Shaver Socket	3M	**1** / 6
CW527GRY	Energy Key Tag with Time Delay	2M	**4** / 60
CW530GRY	LED Foot Lamp	2M	**1** / 60

FRONT PLATES - MAGNESIUM GREY

CW101GRY

CW18HGRY

CW118GRY

ItemCode	Description	Module	Carton Qty.*
CW101GRY	1 Module Front Plate	1M	**10** / 180
CW102GRY	2 Module Front Plate	2M	**10** / 180
CW103GRY	3 Module Front Plate	3M	**8** / 144
CW104GRY	4 Module Front Plate	4M	**8** / 144
CW106GRY	6 Module Front Plate	6M	**8** / 80
CW18HGRY	8 Module Front Plate	8M (H)	**4** / 72
CW18VGRY	8 Module Square Front Plate	8M (S)	**4** / 64
CW109GRY	9 Module Horizontal Front Plate	9M	**8** / 72
CW112GRY	12 Module Front Plate	12M	**4** / 40
CW118GRY	18 Module Front Plate	18M	**3** / 21

FRONT PLATES - SILVER

ItemCode	Description	Module	Carton Qty.*
CW101SLV	1 Module Front Plate	1M	**10** / 180
CW102SLV	2 Module Front Plate	2M	**10** / 180
CW103SLV	3 Module Front Plate	3M	**8** / 144
CW104SLV	4 Module Front Plate	4M	**8** / 144
CW106SLV	6 Module Front Plate	6M	**8** / 80
CW108HSLV	8 Module Front Plate	8M (H)	**4** / 72
CW108VSLV	8 Module Square Front Plate	8M (S)	**4** / 64
CW109SLV	9 Module Horizontal Front Plate	9M	**8** / 72
CW112SLV	12 Module Front Plate	12M	**4** / 40
CW118SLV	18 Module Front Plate	18M	**3** / 21

BS CONVERSION FRAME

ItemCode	Description	Module	Carton Qty.*
26391CW	1 Module Conversion Frame	1M	**40**
26392CW	2 Module Conversion Frame	2M	**40**

DIMENSION
FRONT PLATES

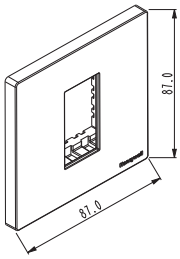

1M

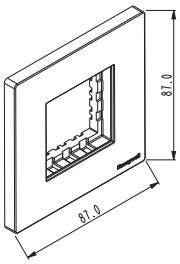

2M

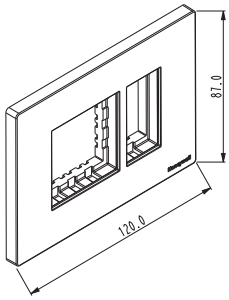

3M

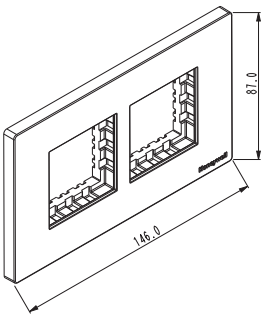

4M

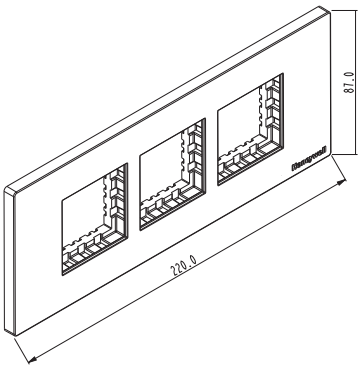

6M

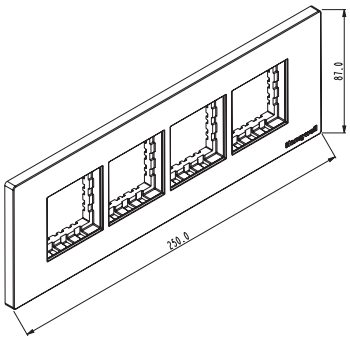

8M (H)

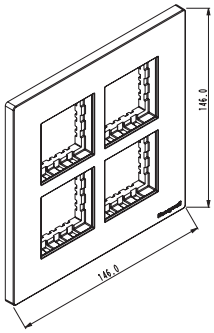

8M (S)

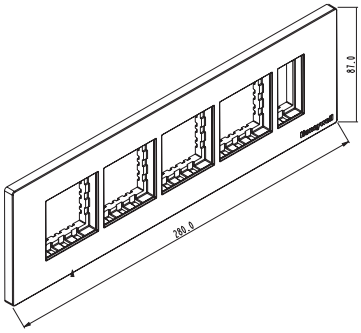

9M

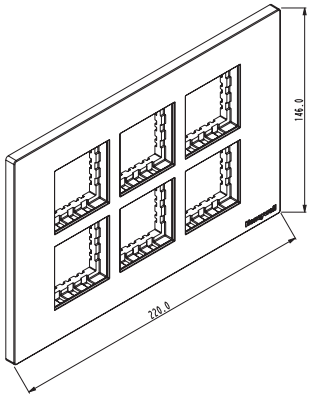

12M

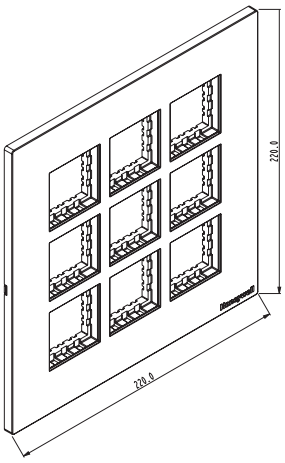

18M

DIMENSION
MOUNTING BOXES

METAL BOXES

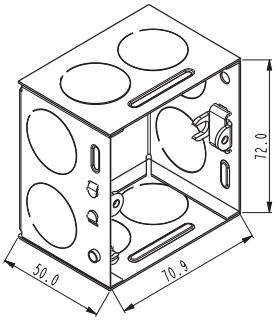

1M & 2M

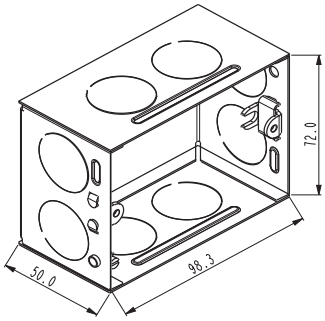

3M

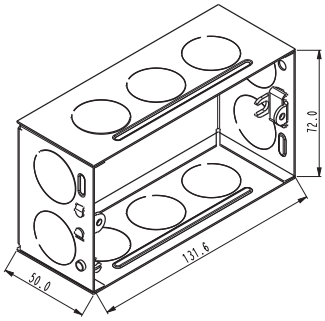

4M

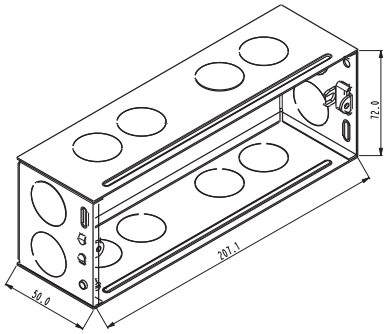

6M

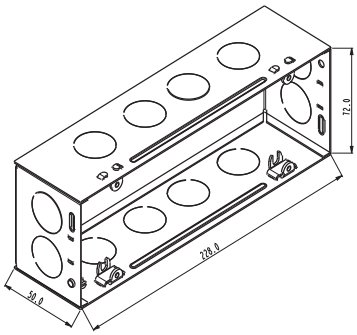

8M (H)

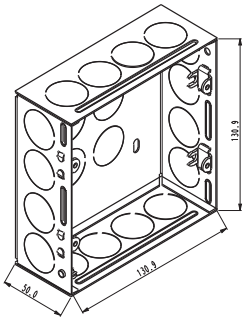

8M (S)

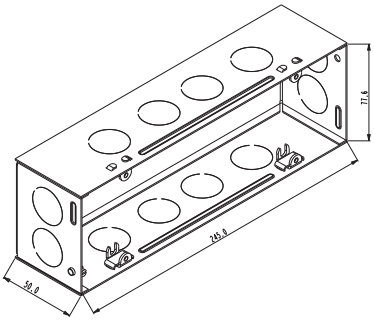

9M

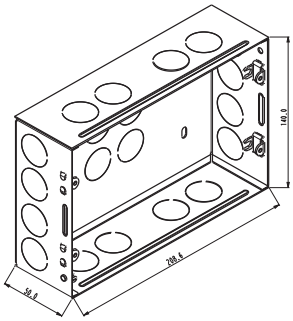

12M

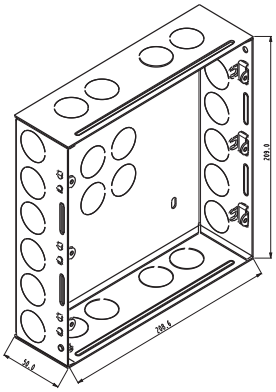

18M

All dimensions are in mm.

DIMENSION
MOUNTING BOXES

SURFACE BOXES

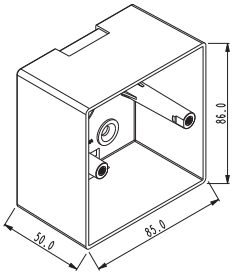

1M & 2M

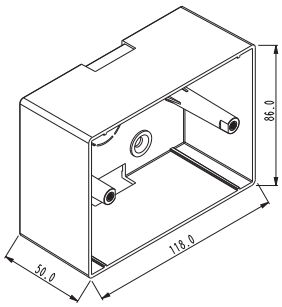

3M

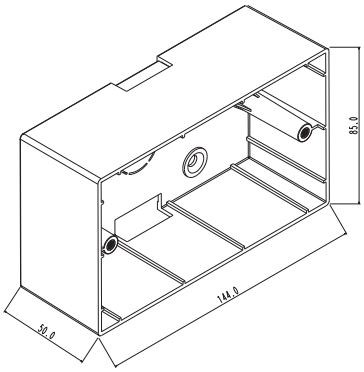

4M

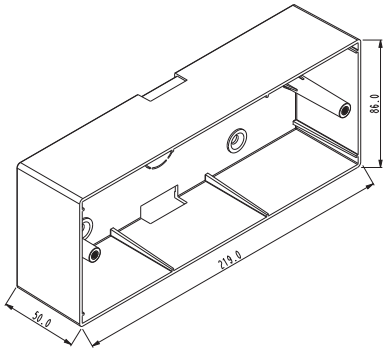

6M

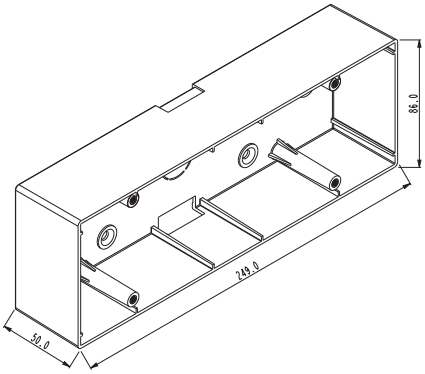

8M (H)

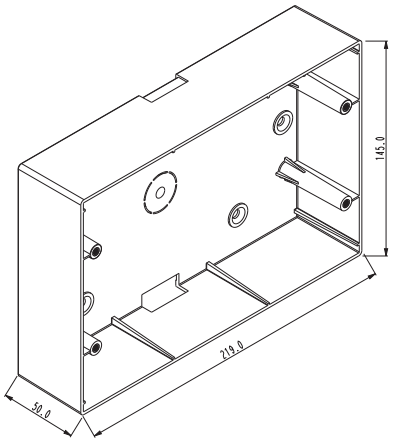

12M

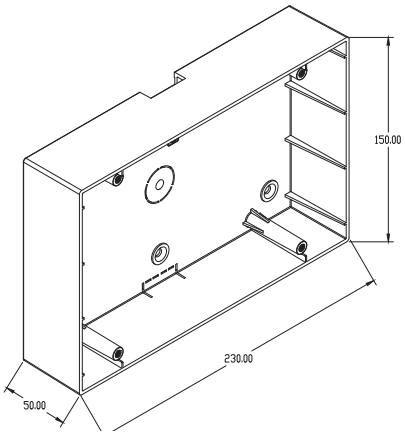

16M

All dimensions are in mm.

NOTES

All dimensions are in mm.

NOTES

NOTES

GHAR MEIN HONEYWELL, TOH LIFE VERY WELL!

BARODA
Ground Floor, 1965,
Alembic City Avenue,
Alembic Campus, Alembic Road,
Vadodara - 390 003

HYDERABAD
8-2-418, Krishnama House,
3rd Floor, Road No. 7,
Banjara Hills,
Hyderabad - 500 034

BENGALURU
Honeywell Camp II,
Bldgs 9A & 9B, Plot C2, RMZ Ecoworld,
Varturhobli, Sarjapur Marathahalli,
Outer Ring Road,
Bengaluru - 560 103

KOLKATA
Unit Number-1205, 12th
Floor, Godrej Waterside
Tower-2, DP Block, Sector-V,
Salt Lake,
Kolkata-700091

CHENNAI
5th , 6th & 7th Floor,
KRM Plaza, North Tower,
#2 Harrington Road, Chetpet,
Chennai - 600 031

MUMBAI
WeWork Chromium,
6th Floor, Milind Nagar,
Opp. L&T Flyover, JVLR, Powai,
Mumbai - 400 076

GURUGRAM
Unitech Trade Center,
5th Floor, Sector 43, Block C,
Sushant Lok, Phase 1,
Gurgaon - 122 022

PUNE
Plot No. 56/57,
Hadapsar Industrial Estate,
Pune - 411 013

Note: Due to continuous improvement in product design and development, actual product and color may vary because of printing limitations.

FOR FURTHER DETAILS, PLEASE REACH US AT :

Toll Free Number : 1800-103-3848
Monday to Sunday : 10AM - 7PM
Whatsapp : +91 81306-91299
email : eesteamindia@honeywell.com
Website: honeywellbuildings.in/electrical-products

Citric-BR 3000 I 16 November 2021
© 2021 Honeywell International Inc.

THE FUTURE IS WHAT WE MAKE IT

Honeywell